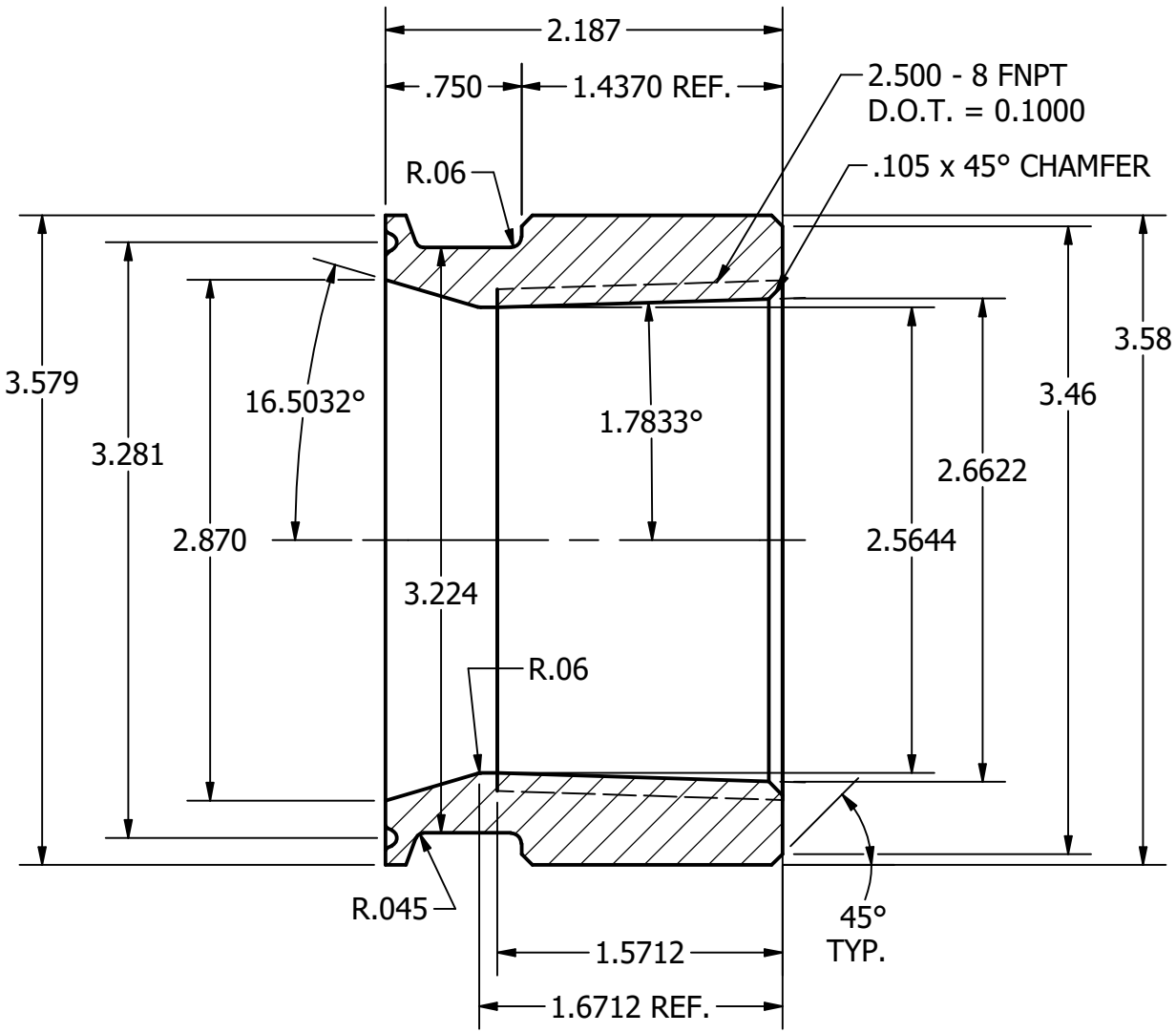

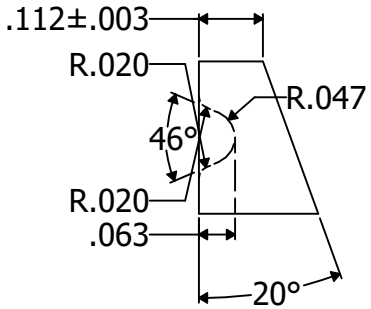

TOLERANCES	DRAWN Engineering 6/9/1998	Steel & O'Brien Mfg. Inc.
DECIMALS: .XX ±.015 .XXX ±.005 .XXXX ±.0005 ANGLES: 1°	ALL EDGES AND FILLETS .015 R UNLESS OTHERWISE SPECIFIED	TITLE 3.000 TC x 2.500 FNPT 22MP x 2.187 OAL
		DWG NO: **22MP-3X2.5** REV
		SCALE: 1 : 1 SHEET 1 OF 1